TECHNICAL DATASHEET

ultra

Eon Concealed Manual Valve

Barcode 5055146101628

Product Code A3400

Finishes Chrome

Product Type Manual Valve

Water Pressure LP2 - 0.2 bar pressure minimum

Standards BS5412, EN200 and/or WRAS

Flowrates

Bar	Flow l/min
0.1	4
0.5	9
1	13
2	18
3	21

Requirement Suitable for all plumbing systems

Guarantee & Aftercare

During installation extra care must be taken to avoid damaging the fittings. We provide a 10 year guarantee against faulty workmanship or materials (excluding serviceable parts), providing they have been installed, cared for and used in accordance with our instructions.

ADDITIONAL INFORMATION

- Ceramic Disc Technology
- Suitable for use with flow regulators

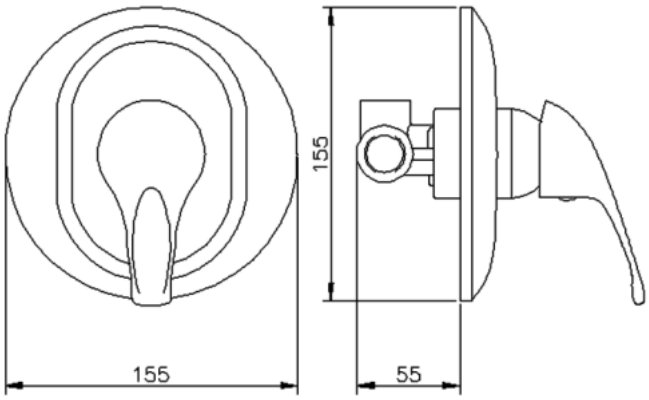

COMPLIANCE: Pending

CUSTOMER CARE:

For further information please call 01282 446789

KEY TO PRODUCT PRESSURE REQUIREMENTS

LP - 0.1 bar min **LP2 - 0.2 bar min** **MP - 0.5 bar min** **HP1 - 1 bar min** **HP2 - 2 bar min**

Ultra Finishing Ltd, Widow Hill Road, Heasandford Industrial Estate, Burnley, Lancashire, BB10 2BQ
Telephone: 01282 436934 Fax: 01282 428915 Web site: www.homeofultra.com